3D View

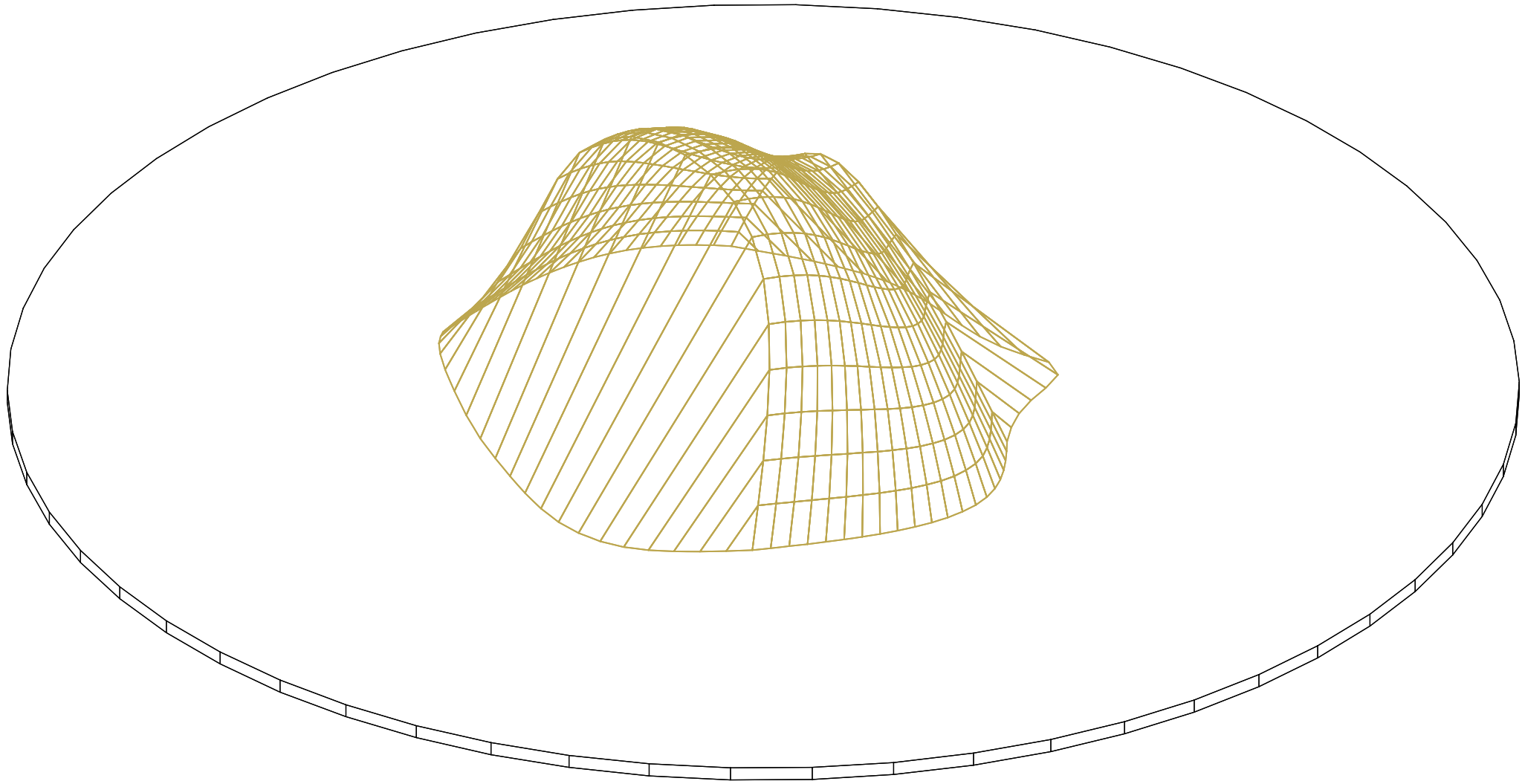

3D View

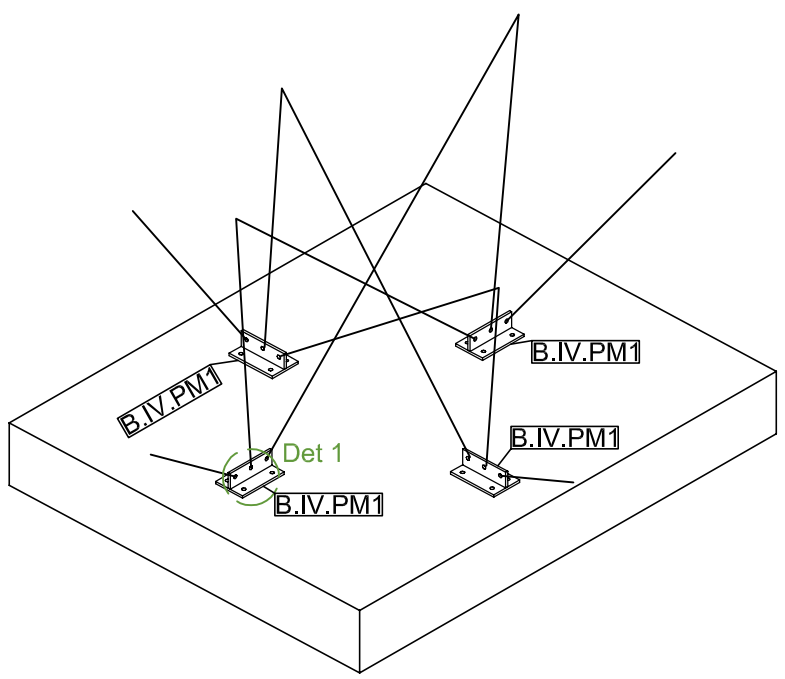

BASE PLAN
AT LEVEL ±0.000m

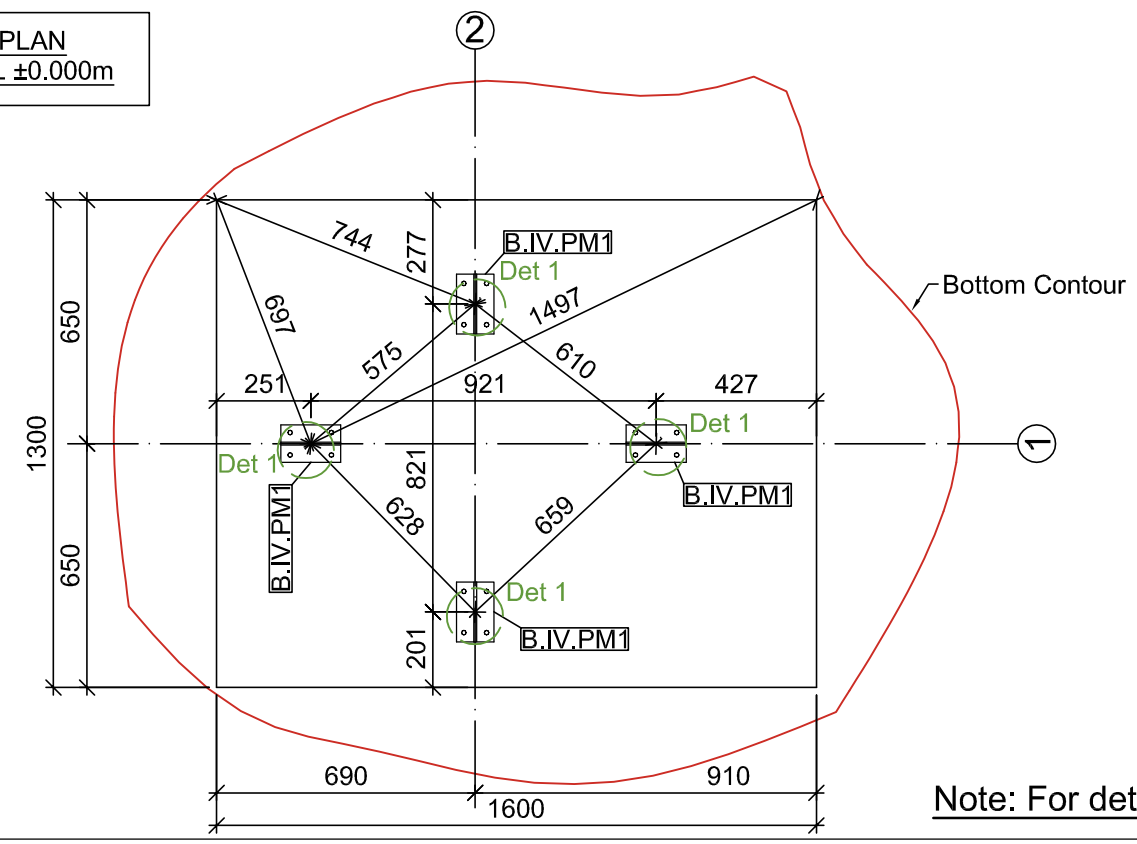

Note: For details see sheet S504!!!

REVISIONS:

No.	Date
	04.11.2015

Client : Alfa Afikim
E-mail: ariel@kav-itonut.il
Country: ISRAEL
Town: Bnei Brak

Israel - Ashkelon - Alfa Afikim

Israel - Ashkelon

DRAWING INCLUDES:
Boulder 2 (Small)

3D Views
and
Base Plan

DRAWN: eng.E.Doychinova
CHECKED: ENG.P.PETROV
SCALE: 1:20
PROJECT NO.: 3842
SHEET: S502 Format: A3
DRAWING: M

Section axis 1-1

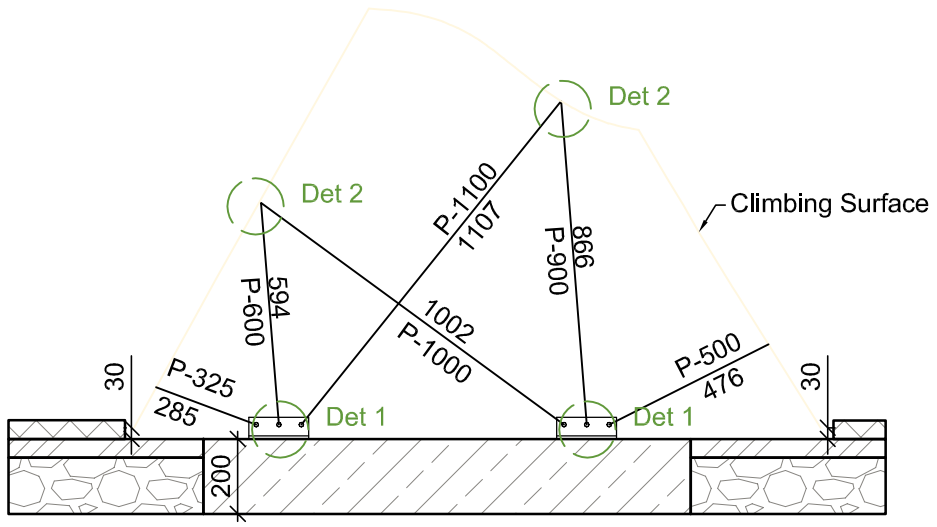

Section axis 2-2

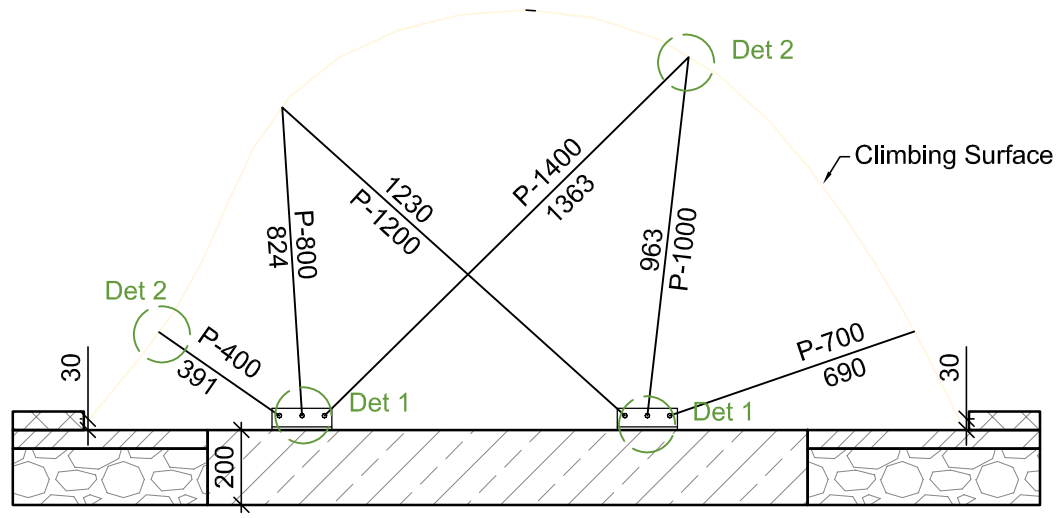

Note: For details see sheet S504!!!

Legend:	
	Existing foundation
	Gravel
	Floor
	Bark chips

REVISIONS:

No.	Date
	04.11.2015

Client : Alfa Afikim
E-mail: ariel@kav-itonut.il
Country: ISRAEL
Town: Bnei Brak

Israel - Ashkelon - Alfa Afikim

Israel - Ashkelon

DRAWING INCLUDES:
Boulder 2 (Small)

Sections

DRAWN: eng.E.Doychinova
CHECKED: ENG.P.PETROV
SCALE: 1:20
PROJECT NO.: 3842
SHEET: S503 Format: A3
DRAWING: M

Detail 1

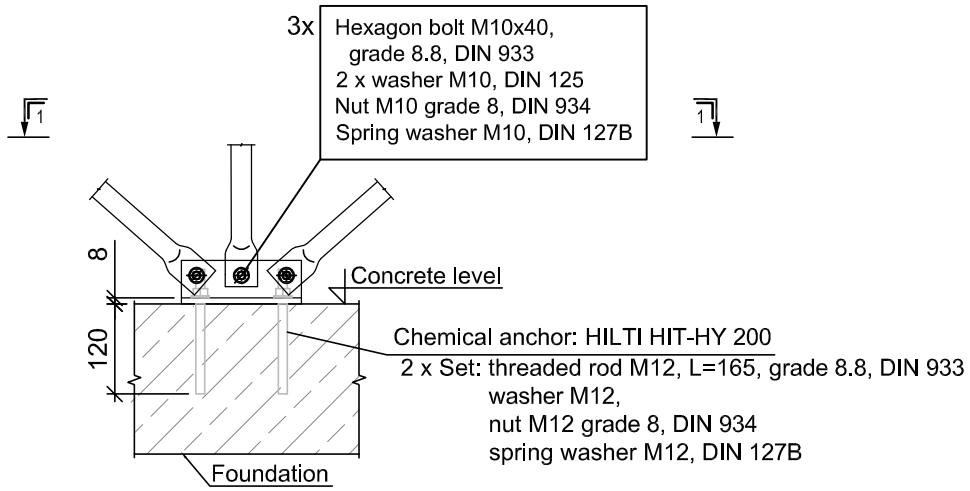

1 - 1

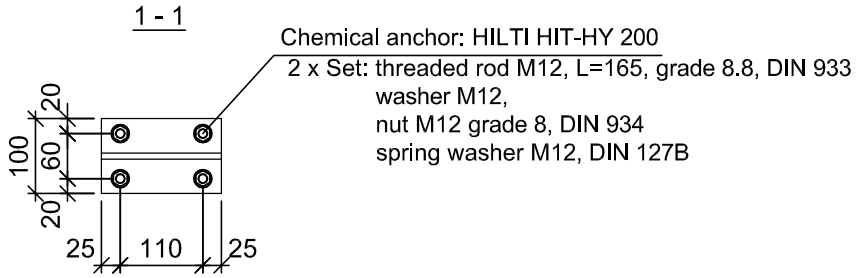

Detail 2

Connection "arms - construction"

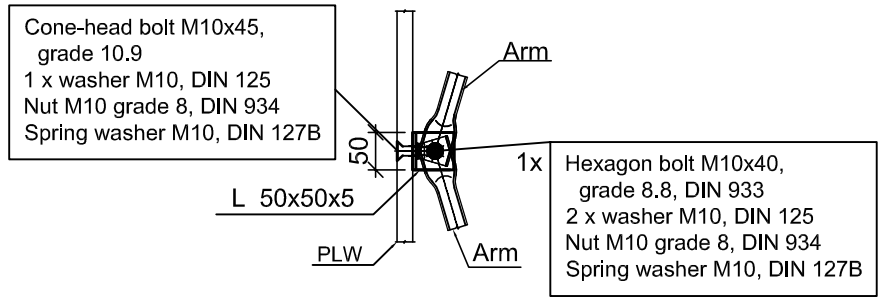

L 50x50x5

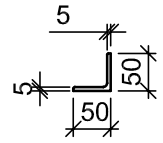

REVISIONS:

No.	Date
	04.11.2015

Client : Alfa Afikim
E-mail: ariel@kav-itonut.il
Country: ISRAEL
Town: Bnei Brak

Israel - Ashkelon - Alfa Afikim

Israel - Ashkelon

DRAWING INCLUDES:

Boulder 2 (Small)

Details

DRAWN: eng.E.Doychinova
CHECKED: ENG.P.PETROV
SCALE: 1:10
PROJECT NO.: 3842
SHEET: S504 Format: A3
DRAWING: M

B.IV.PM1 - 4pcs.

PL30 - 4pcs.

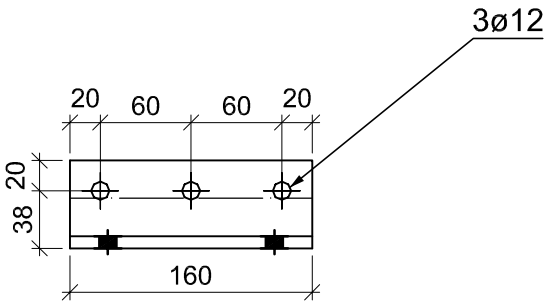

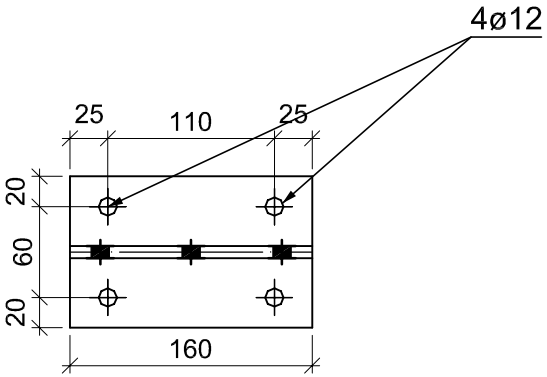

Separate plates!!!

1.Material: steel S235 JR (EN 10025-1)
2. All non-quoted items to be welded centrally.
3. If the thickness of welds "a" is not specified (drawing 1) to be accepted lesser of the two:
- Thickness of thinner than acceding items - "t"
- 4mm.
All fillet welds to be wrapped around the edges or corners of the plates / profiles, the length of the welds after cornering must be at least 2 times the thickness of the welds.
4. Spliced welds to be performed with a partial field min 80% of the thickness of the base material, except in case of spliced splicing, in which required 100% fully field or other labeled compounds.
5. All welds to be performed manually and to be continuous, unless otherwise indicated.
6. All items to be rounded by welds, unless otherwise indicated.
7. To be made control assembly of the elements. /as it's illustrated in the drawings/
8. All dimensions are in millimeters.
9. All boxes are closed of the free end with steel plate.
10.The surface of all the items to be cleaned to metallic luster, to be primed with epoxy primer with a thickness of 60 microns and to be painted with polyurethane paint with a thickness of 60 microns.

REVISIONS:

No.	Date
	04.11.2015

Client : Alfa Afikim
E-mail: ariel@kav-itonut.il
Country: ISRAEL
Town: Bnei Brak

Israel - Ashkelon - Alfa Afikim

Israel - Ashkelon

DRAWING INCLUDES:

Preparations of Plates

DRAWN:	eng.N.Taneva
CHECKED:	ENG.P.PETROV
SCALE:	1:5
PROJECT NO.:	3842
SHEET: S505	Format: A4
DRAWING:	P05

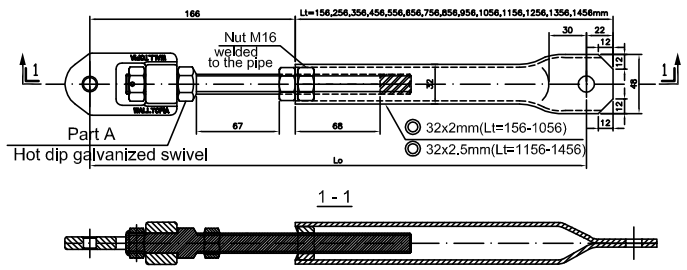

1 - 1

Notes:
1. Material: Steel S235 JR
(EN 10025 - 1)
2. Type of the welding: filled weld
3. All of the weldings are continuous and have to be done manually, unless specified.
4.If the thickness of welds "a" is not specified t - thickness of the thinner element (drawing 1) to be accepted lesser of the two:
-Thickness of thinner than acceding items - "t"
-4mm.

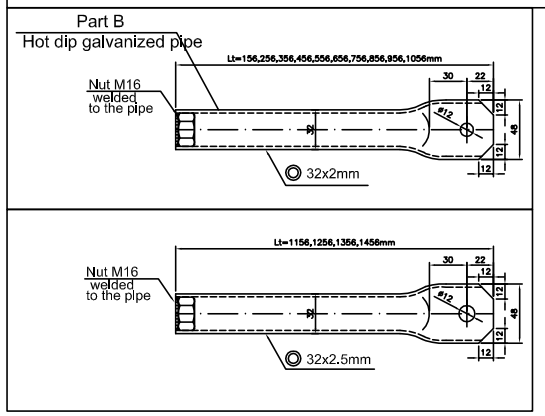

Arms

Part	Name	Adjustable length-B (mm)	Pcs	Reserve (pcs)	Total (pcs)	Weight (kg)
A			12		12	8,00
C	P325	156	1		1	0,23
B	P400	256	1		1	0,38
	P500	356	1		1	0,53
	P600	456	1	1	2	1,37
	P700	556	1	1	2	1,67
	P800	656	1	1	2	1,97
	P900	756	1	1	2	2,27
	P1000	856	2		2	2,57
	P1100	956	1		1	1,43
	P1200	1056	1		1	1,58
	P1300	1156	0		0	0,00
	P1400	1256	1		1	1,88
	P1500	1356	0		0	0,00
	P1600	1456	0		0	0,00
D			1		1	0,59
	Total arms				12	pcs
	Total reserves				4	pcs
	Total weight of arms' pipes				15,89	kg
	Total weight of swivels				8,59	kg

Extender for arms
2 pcs

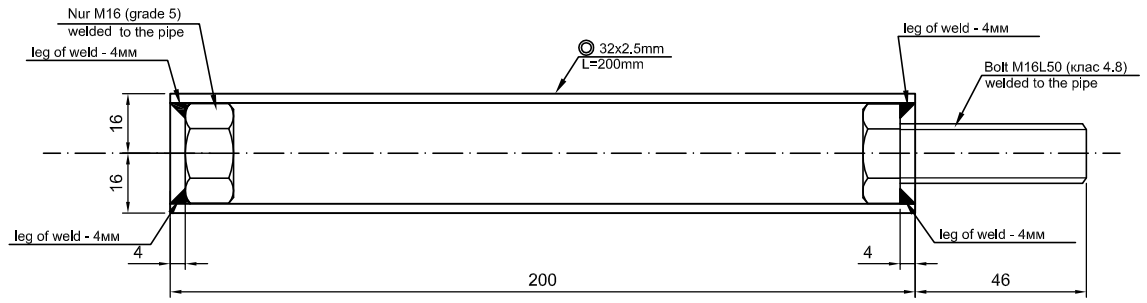

REVISIONS:

No.	Date
	04.11.2015

Client: Alfa Afikim
E-mail: ariel@kav-itonut.il
Country: ISRAEL
Town: Bnei Brak

Israel - Ashkelon - Alfa Afikim

Israel - Ashkelon

DRAWING INCLUDES:
Part IV
Arms

DRAWN:	eng.N.Taneva
CHECKED:	ENG.P.PETROV
SCALE:	1:20
PROJECT NO.:	3842
SHEET: S506	Format: A1
DRAWING:	P02

Threaded rod M10 L165mm

16 pcs.

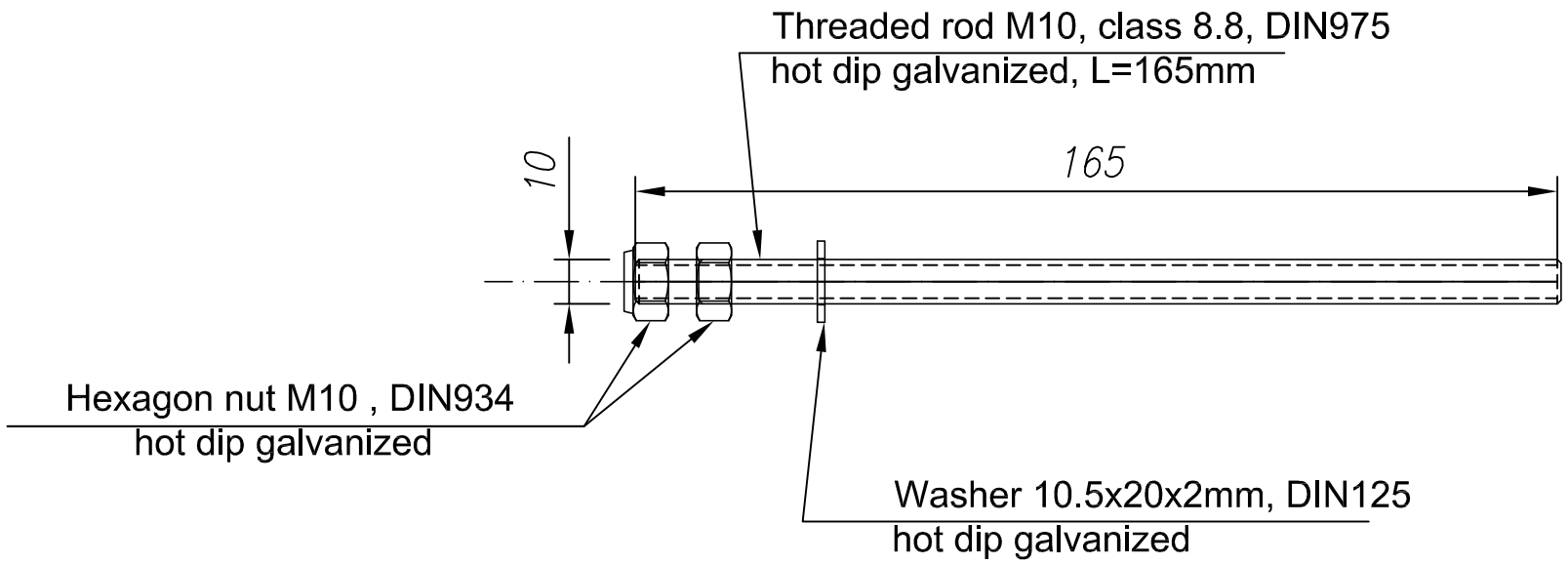

Notes:
On each anchor is placed
marking at both ends by hit. The marking is '+' !!!

Threaded rods assembled with nut and washer
are sent to the site!

REVISIONS:

No.	Date
	04.11.2015

Client : Alfa Afikim
E-mail: ariel@kav-itonut.il
Country: ISRAEL
Town: Bnei Brak

Israel - Ashkelon - Alfa Afikim

Israel - Ashkelon

DRAWING INCLUDES:
Part IV
Threaded rod M10

DRAWN: eng.N.Taneva
CHECKED: ENG.P.PETROV
SCALE: 1:2
PROJECT NO.: 3842
SHEET: S507 Format: A3
DRAWING: P09